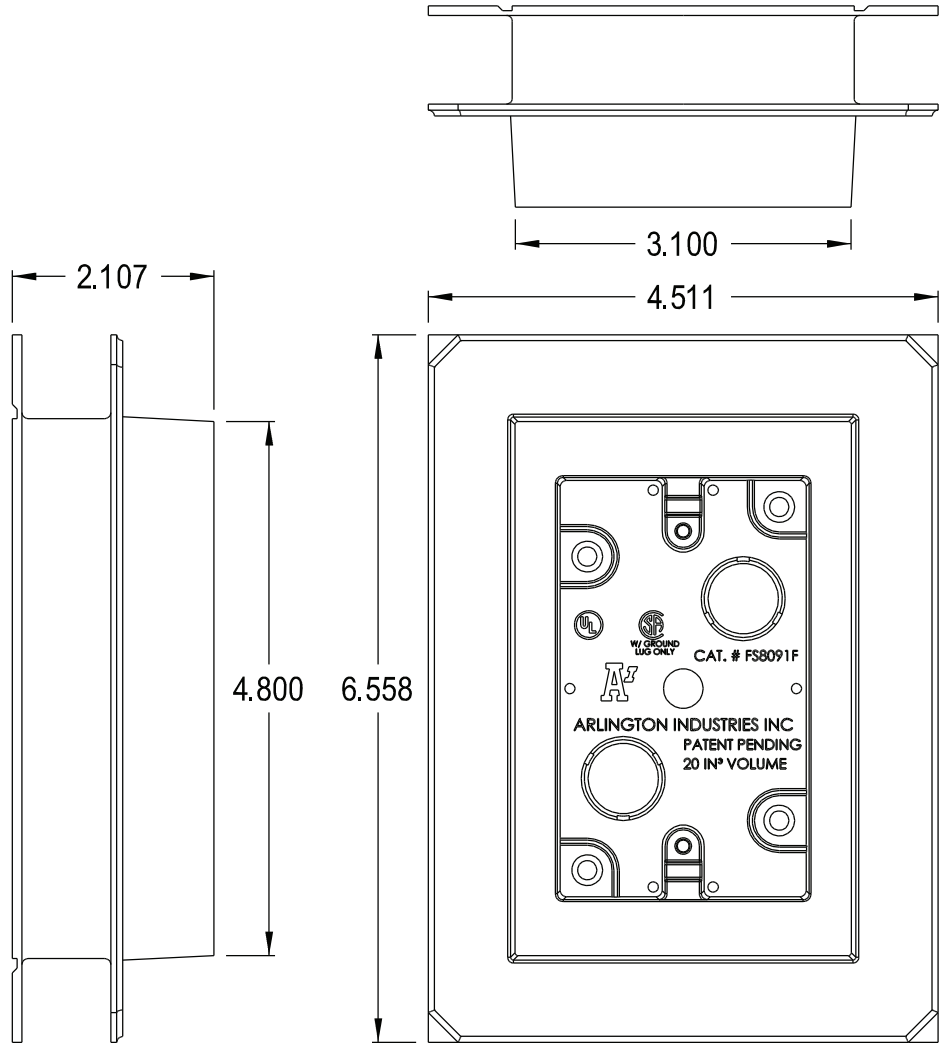
3.100
2.107
4.511
4.800
6.558
W/ GROUND LUG ONLY
CAT. # FS8091F
ARLINGTON INDUSTRIES INC
PATENT PENDING
20 IN³ VOLUME