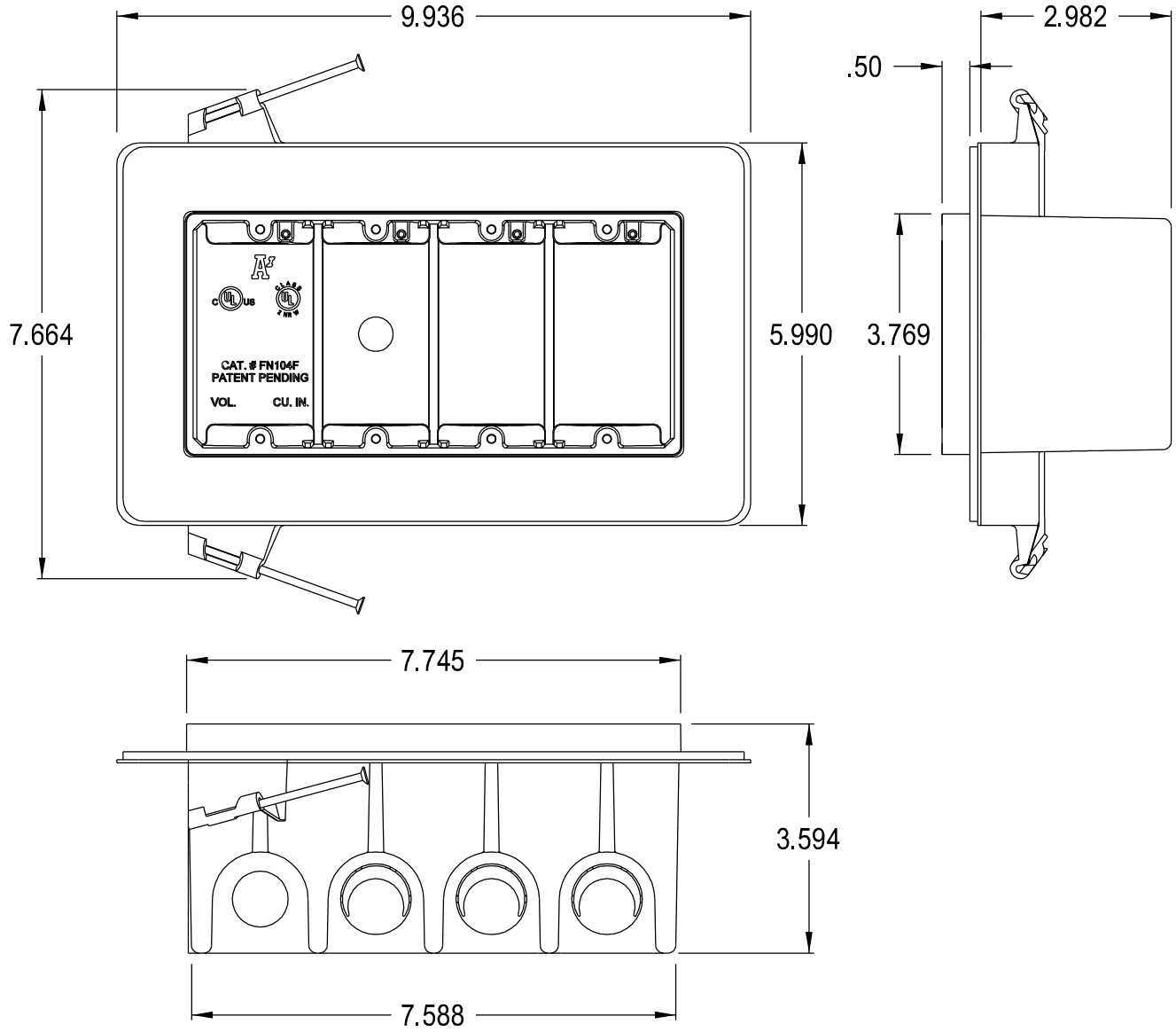
9.936
2.982
.50
7.664
5.990
3.769
CAT. # FN104F
PATENT PENDING
VOL.
CU. IN.
7.745
3.594
7.588