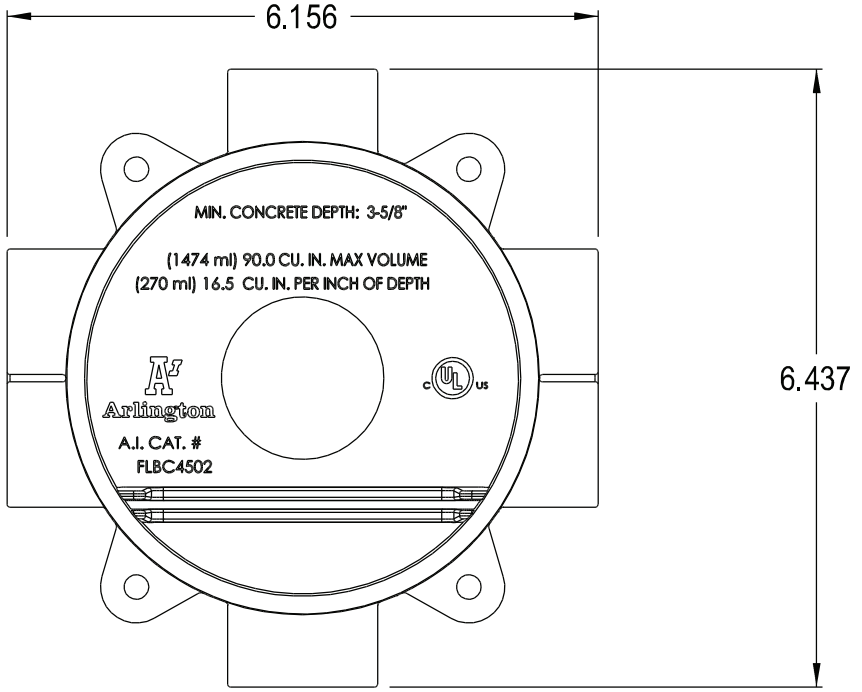
6.156
6.437
MIN. CONCRETE DEPTH: 3-5/8"
(1474 ml) 90.0 CU. IN. MAX VOLUME
(270 ml) 16.5 CU. IN. PER INCH OF DEPTH
Arlington
A.I. CAT. #
FLBC4502

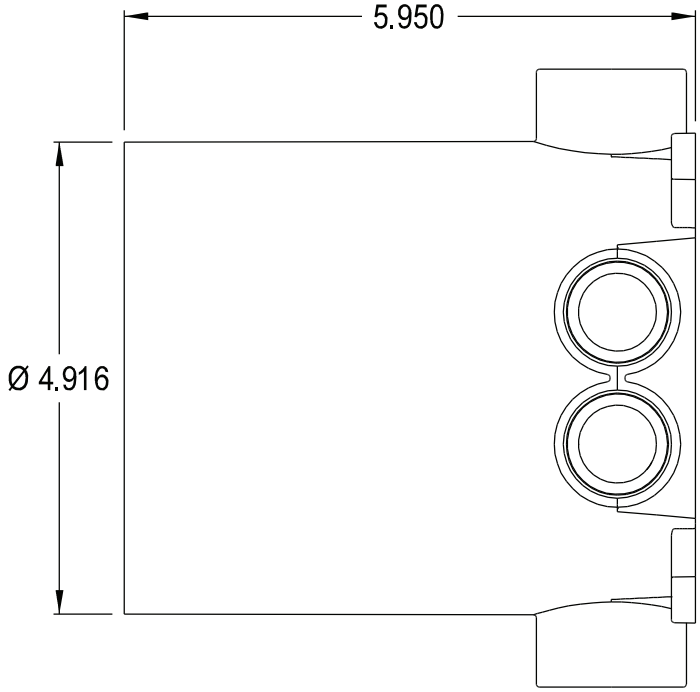
5.950
Ø 4.916

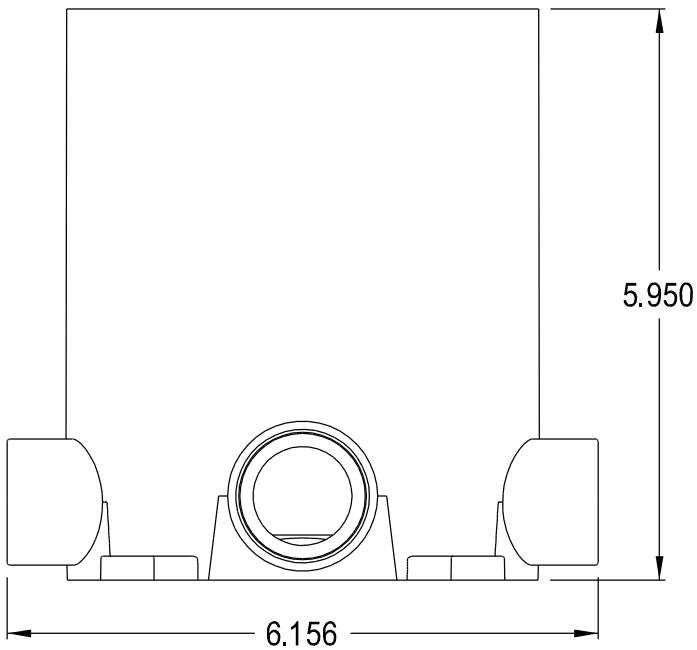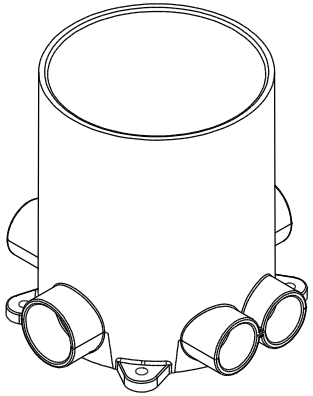
5.950
6.156